GENESEE

Design & Manufacture of Production Cutting Tools

Genesee Manufacturing Company
566 Hollenbeck Street, Rochester, NY 14621, USA
585.266.3201 • Fax: 585.266.4499
www.geneseemfg.com • genesee.customer.service@geneseemfg.com

Genesee Manufacturing Company's versatile tools improve production for items used by people all over the world.

Automotive

Aerospace

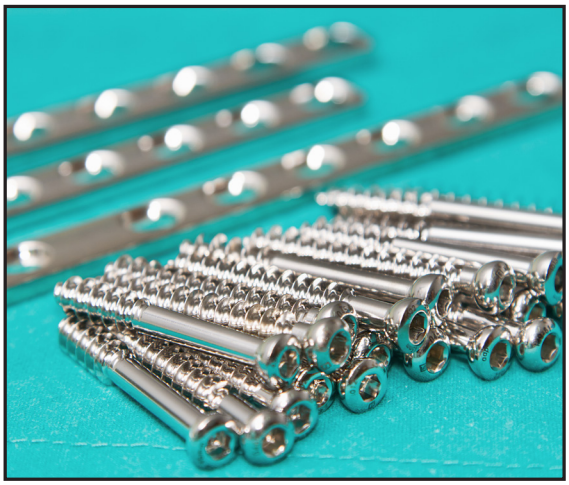

Biomedical

Firearms

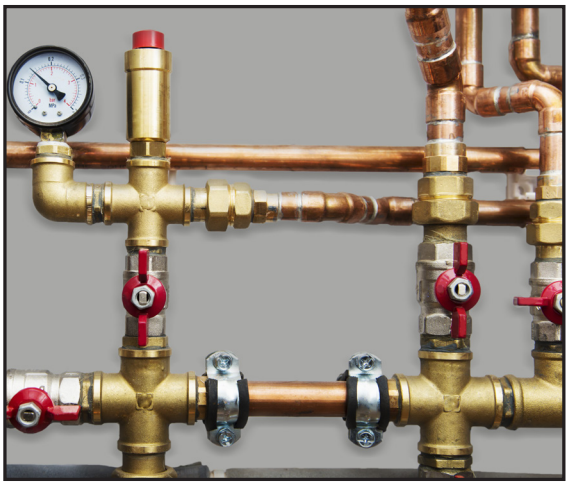

Plumbing/Hydraulics

Telecommunications

TABLE OF CONTENTS

GEN-DEX® INDEXABLE....4
GENRAL PURPOSE....8
LIGHT DUTY....10
COMPACT....12
ALIGNMENT CORRECTING....14
MAXIMUM REMOVAL....16
FINISHING....18
TUBE DEBURRING TOOLS....20
FACING AND COUNTERBURRING TOOLS....22
HOLLOW MILL APPLICATIONS....24
NOTES....25
INDI-SQUARE....26

Genesee Manufacturing is happy to provide you with a quotation for your tooling needs and to assist you in ordering the right product for your specifications.

To request a quote or a recommendation for a standard or special tool, provide the following information:

- The finish diameter to be hollow milled.
- The rough stock diameter or outer part diameter.
- The length to be hollow milled.
- Blade geometry.
  - Specify either standard (square corner) or the chamfer or radius required.
  - Part print required for form blades.
- Maximum shank size or size and type of shank required.
- Material and type of part.
- Proposed feed and speed (or ask us to recommend).
- Machine tool, tool holder and extension.
- Finish/tolerance requirements.

A part print is required for special tool quotations.

Genesee production tools will successfully machine any material-such as steel, malleable iron, aluminum, brass, bronze, cast iron and others—on just about any machine tool, old or new, from automatics to CNC machining centers.

GEN-DEX®
PATENTED

The first uniformly adjustable, positive rake, indexable insert hollow mill enables you to hollow mill from the end of the part with multiple indexable inserts.

Combines standard ISO inserts in precision, match ground, uniformly adjustable insert holders for hollow milling both ferrous and non-ferrous materials.

Tools have ¼" range of adjustability from .040" to 2" diameters.

A unique combination of toolholder geometry and insert geometry produces constant axial and radial rake and constant clearance angles through the entire range of diameter adjustment.

All tools have at least three, and, in larger sizes, as many as five inserts hollow milling for maximum productivity.

Tools are standard with straight shanks for use with toolholders in CNC machining centers, lathes and screw machines or in conventional turning, milling or automatic screw machines.

All tool bodies are precision hardened and ground for years of dependable use.Special tools, shanks, toolholders quoted on application.

GEN-DEX® Inserts

Genesee's large selection of precision ground GEN-DEX® inserts provide the distinct advantage of the "C" tolerance on I.C. and thickness. This feature, normally available only by special order, contributes to optimum, balanced cutting of the hollow mill.

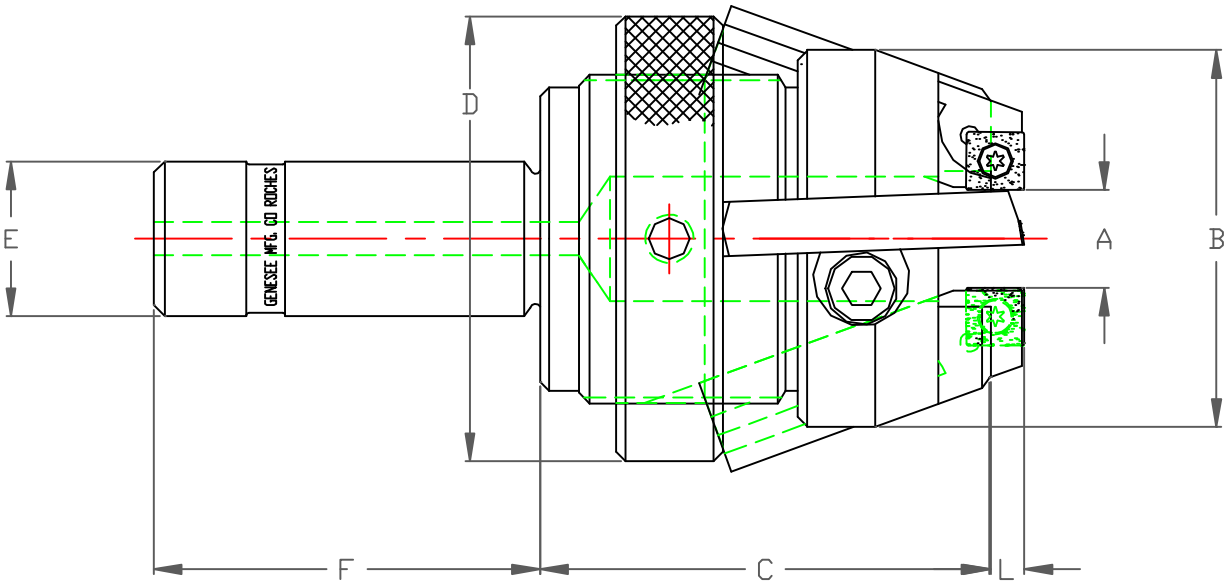

Specifications

Tool Catalog Number	A	B	C	D	E	F	
	Cutting Capacity	Head Diameter	Length Body	Largest Outer Diameter	Shank Diameter	Length Shank	Number of Holders
00-GX-3	.040 to 1/4	1 5/8	2 1/4	1 13/16	3/4	2	3
18-GX3-3	1/8 to 3/8	2 11/64	2 33/64	2 1/2	3/4	2 1/4	3
18-GX3-4	1/8 to 3/8	2 11/64	2 33/64	2 1/2	1	2 1/4	3
14-GX3-3	1/4 to 1/2	2 1/4	2 33/64	3 3/4	3/4	2 1/4	3 or 4
14-GX3-4	1/4 to 1/2	2 1/4	2 33/64	3 3/4	1	2 1/4	3 or 4
12-GX3-3	1/2 to 3/4	2 1/2	2 29/32	2 7/8	3/4	2 1/4	3 or 4
12-GX3-4	1/2 to 3/4	2 1/2	2 29/32	2 7/8	1	2 1/4	3 or 4
34-GX3-5	3/4 to 1	2 3/4	2 15/16	3 1/8	1 1/4	3	3
34-GX4-5	3/4 to 1	2 3/4	2 15/16	3 1/8	1 1/4	3	3 or 4
100-GX4-5	1 to 1 1/4	2 7/8	3	3 3/8	1 1/4	3	3 or 4
100-GX5-5	1 to 1 1/4	2 7/8	3	3 3/8	1 1/4	3	3 or 5
114-GX4-6	1 1/4 to 1 1/2	3 7/32	3	3 5/8	1 1/2	3	3 or 4
114-GX5-6	1 1/4 to 1 1/2	3 7/32	3	3 5/8	1 1/2	3	3 or 5
112-GX4-6	1 1/2 to 1 3/4	3 33/64	3	4 1/8	1 1/2	3	3 or 4
112-GX5-6	1 1/2 to 1 3/4	3 33/64	3	4 1/8	1 1/2	3	3 or 5
134-GX4-6	1 3/4 to 2	3 47/64	3	4 3/8	1 1/2	3	3 or 4
134-GX5-6	1 3/4 to 2	3 47/64	3	4 3/8	1 1/2	3	3 or 5

GEN-DEX® INSERT HOLDERS

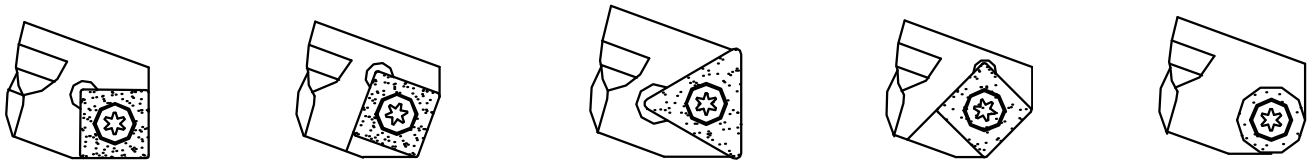

STANDARD STYLES

EXAMPLES OF CUSTOM APPLICATIONS

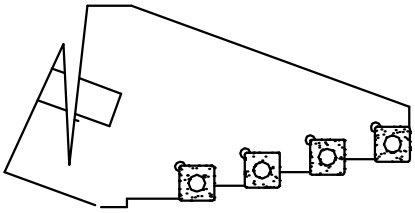

STEP, FACING

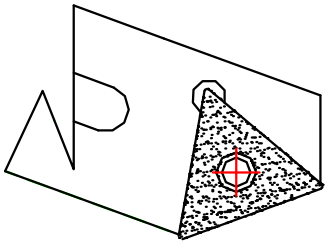

TAPERS

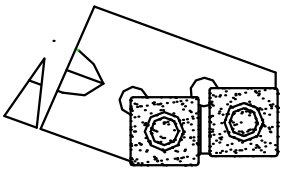

STEP, TURNING, FACING

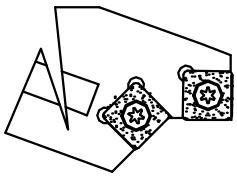

TURNING, FACING, CHAMFERING

Indexable Insert Holders		
Holder Catalog Number	Number Per Set	Pocket
GX35-3-SQ	3	Square
GX35-3-45	3	45 Degree
GX35-3-20	3	20 Degree
GX35-4-SQ	4	Square
GX35-4-45	4	45 Degree
GX35-4-20	4	20 Degree
GX35-5-SQ	5	Square
GX35-5-45	5	45 Degree
GX35-5-20	5	20 Degree
GX35-3-TR	3	Triangle
GX35-4-TR	4	Triangle
GX35-5-TR	5	Triangle
GX35-3-RD	3	Round
GX35-4-RD	4	Round
GX35-5-RD	5	Round
GX23-3-SQ	3	Square
GX23-3-20	3	20 degree
GX23-3-RD	3	Round

SPECIAL GEN-DEX®

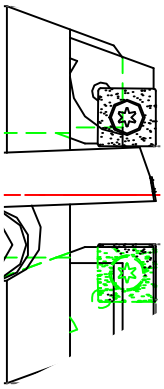

PLACEHOLDER TEXT

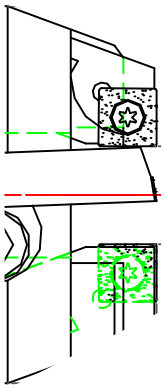

PLACEHOLDER TEXT

GEN-DEX® INSERT INFORMATION

Coatings

#	Type	Chemical Composition	Thick-ness	Cutting Speed	Color	Features
111	CVD	Tic/Ticn/Tin	8	Slow to Moderate–up to 600 su/ft/min	Gold	General purpose for ferrous material.
150	CVD	Tic/Tin/ Al203/Tin	5	Moderate to High	Gold	Thinner CVD coating for light hones in ferrous and some limited non ferrous materials.
114	PVD	Tin	1 to 3	Moderate	Gold	Coating for sharp and light honed inserts in nonferrous and some ferrous (stainless) material.
116	PVD	TICN	2 to 4	Moderate	Blue-Gray	Multi-layer for sharp and light honed inserts in nonferrous and some ferrous (stainless) materials (requires coolant).
117	PVD	TIAIN	2 to 4	Moderate	Violet-Purple	Multi-layer for sharp and light honed inserts in nonferrous and some ferrous (stainless) materials (more heat resistant than 114 to 116).

Grade Chart

	Chemical Composition (WT%)						
Grade	TIC	TAC	CO	WC	Hardness	TRS PSI X 100 Degrees	Features
2	0	0	6	94	92	380	For cast irons and nonferrous materials very light or no hone.
5	7	8	8	77	91.2	360	For steel & cast irons where impact resitance is required.
50M	7	12	8	73	91.6	350	Premium milling grade with additional Tac for alloy steels chip crater resistance

Hone and Edge Preparation: as indicated by letter following insert description
Example: SCCT 32.52A

F= up sharp (no Hone) A= .001 to .003 Hone (light) B= .003 to .005 Hone (medium) C= .005 to .007 Hone (heavy)
X= .0002 to.0005 Hone (very light) T= T-land chamfered edge (extra strong dge)

Coated Grades: As indicated by number following (slash)
Example: SCCT32.52A/114 (See Coatings Chart)

Non-Coated and Substrates for Coatings: As indicated by number following slash (/) or following dash(-) after coating
Example: SCCT 32.52A/5 SCCT32.52A/11-5 (See Grade Chart)

Style "B" Genesee Adjustable Hollow Mills

- General Purpose
- Positive Cutting Rake
- Four or Five Blades

(As seen in photo)

Style "A" Genesee Adjustable Hollow Mills

- General Purpose
- Zero Cutting Rake
- Four or Five Blades

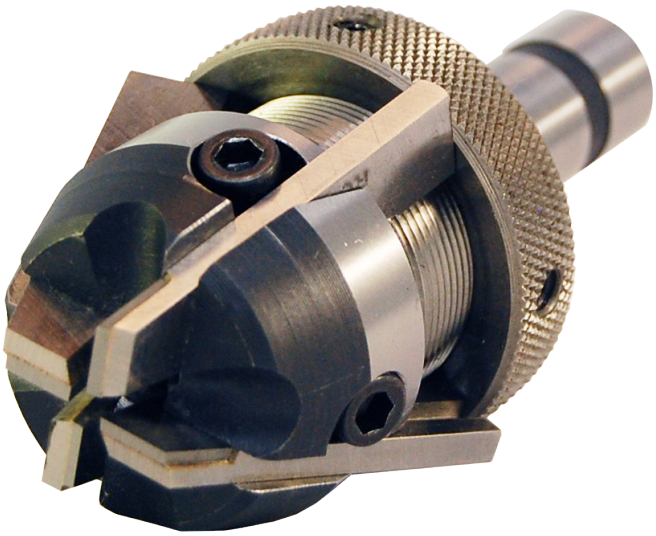

L dimension varies from 3/8" to 5/8" depending upon diameter to be cut and size of blade.

Style					
Positive Cutting Rake			Zero Cutting Rake		
Tool Catalog Number		Blade Catalog Number	Tool Catalog Number		Blade Catalog Number
Std. Straight Shanks	Std. Taper Shanks	H.S.S. Blades	Std. Straight Shanks	Std. Taper Shanks	H.S.S. Blades
18-M2	18-BT	BM 17-4	18-L2	18-AT	AL17-4
14-BS	14-BT		14-AS	14-AT	
38-BS	38-BT 3	BM 23-4	38-AS	38-AT3	AL23-4
12-BS	12-BT		12-AS	12-AT	
58-BS	58-BT		58-AS	58-AT	
34-BS	34-BT		34-AS	34-AT	
78-BS	78-BT	B28-4	78-AS	78-AT	AL28-4
100-BS	100-BT		100-AS	100-AT	
118-BS	118-BT	B28-5	118-AS	118-AT	A28-5
114-BS	114-BT		114-AS	114-AT	
138-BS	138-BT		138-AS	138-AT	
112-BS	112-BT		112-AS	112-AT	
158-BS	158-BT		158-AS	158-AT	
134-BS	134-BT		134-AS	134-AT	
178-BS	178-BT		178-AS	178-AT	

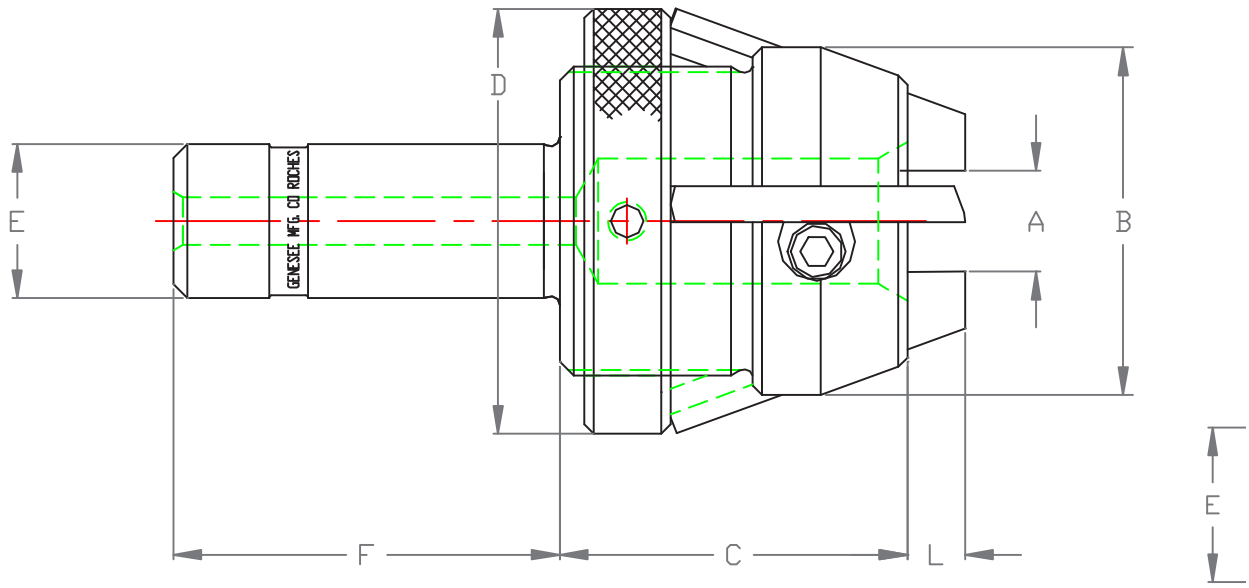

Specifications

A	B	C	D	E	F	G		
Capacity	Diameter Head	Length Body	Largest Outer Diameter	Diameter Shank	Length Shank	M.T. Shank Number	Number of Blades	Size of Blades
1/8 to 1/4	1 13/16	2 3/8	2 1/4	1	2 1/2	2	4	.170 × 1/2 × 2
1/4 to 3/8	1 15/16	2 3/8	2 3/8	1	2 1/2	2	4	.170 × 1/2 × 3
3/8 to 1/2	2 3/8	2 7/8	2 7/8	1	2 1/2	3	4	.230 × 5/8 × 2 1/2
1/2 to 5/8	2 7/16	2 7/8	3 1/8	1 1/4	3	3	4	.230 × 5/8 × 2 1/2
5/8 to 3/4	2 5/8	2 7/8	3 1/8	1 1/4	3	3	4	.230 × 5/8 × 2 1/2
3/4 to 7/8	2 15/16	3	3 3/8	1 1/2	3	3	4	.280 × 3/4 × 2 5/8
7/8 to 1	3 1/8	3	3 5/8	1 1/2	3	3	4	.280 × 3/4 × 2 5/8
1 to 1 1/8	3 3/16	3	3 5/8	2	3	4	5	.280 × 3/4 × 2 5/8
1 1/8 to 1 1/4	3 3/8	3	4 1/8	2	3	4	5	.280 × 3/4 × 2 5/8
1 1/4 to 1 3/8	3 7/16	3	4 1/8	2	3	4	5	.280 × 3/4 × 2 5/8
1 3/8 to 1 1/2	3 5/8	3	4 3/8	2	3	4	5	.280 × 3/4 × 2 5/8
1 1/2 to 1 5/8	3 11/16	3	4 3/8	2 1/2	3 1/2	4	5	.280 × 3/4 × 2 5/8
1 5/8 to 1 3/4	3 7/8	3	4 5/8	2 1/2	3 1/2	4	5	.280 × 3/4 × 2 5/8
1 3/4 to 1 7/8	3 15/16	3	4 5/8	2 1/2	3 1/2	4	5	.280 × 3/4 × 2 5/8
1 7/8 to 2	4 1/8	3	4 7/8	2 1/2	3 1/2	4	5	.280 × 3/4 × 2 5/8

Style "M" Genesee Adjustable Hollow Mills

- Light Duty
- Positive Cutting Rake
- Four Blades

Style "L" Genesee Adjustable Hollow Mills

- Light Duty
- Zero Cutting Rake
- Four Blades

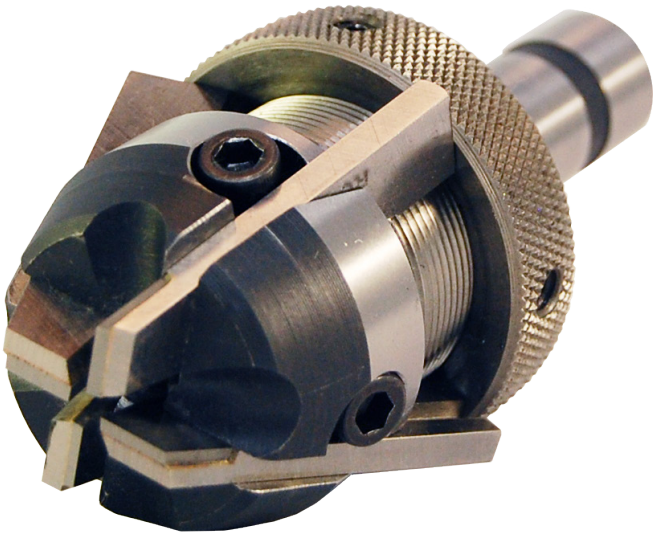

L dimension varies from 3/8" to 5/8" depending upon diameter to be cut and size of blade.

Style					
Positive Cutting Rake			Zero Cutting Rake		
Tool Catalog Number		Blade Catalog Number	Tool Catalog Number		Blade Catalog Number
Std. Straight Shanks	Std. Taper Shanks	H.S.S. Blades	Std. Straight Shanks	Std. Taper Shanks	H.S.S. Blades
18-M2	18-BT	BM 17-4	18-L2	18-AT	AL17-4
14-BS	14-BT		14-AS	14-AT	
38-BS	38-MT	BM 23-4	38-LS	38-LT	AL23-4
12-BS	12-MT		12-AS	12-LT	
58-BS	58-MT		58-AS	58-LT	
34-MS	34-MT		34-LS	34-LT	
78-MS	78-MT		78-LS	78-LT	
100-MS	100-MT		100-LS	100-LT	
118-MS	118-MT		118-LS	118-LT	
114-MS	114-MT		114-LS	114-LT	
138-MS	138-MT		138-LS	138-LT	
112-MS	112-MT		112-LS	112-LT	
158-MS	158-BT		158-LS	158-LT	
134-MS	134-MT		134-LS	134-LT	
178-BS	178-MT		178-LS	178-LT	

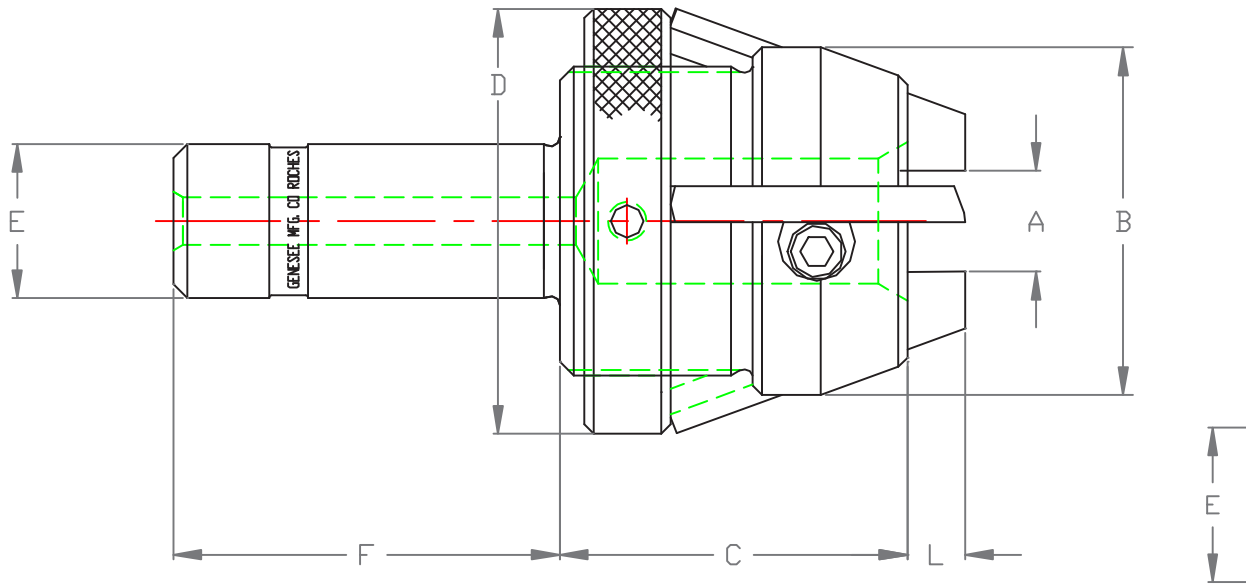

Specifications

A	B	C	D	E	F	G		
Capacity	Diameter Head	Length Body	Largest Outer Diameter	Diameter Shank	Length Shank	M.T. Shank Number	Number of Blades	Size of Blades
1/8 to 1/4	1 13/16	2 3/8	2 1/4	1	2 1/2	2	4	.170 × 1/2 × 2
1/4 to 3/8	1 15/16	2 3/8	2 3/8	1	2 1/2	2	4	.170 × 1/2 × 2
3/8 to 1/2	2 1/16	2 3/8	2 1/2	1	2 1/2	2	4	.170 × 1/2 × 2
1/2 to 5/8	2 7/16	2 7/8	3 1/8	1 1/4	3	2	4	.230 × 5/8 × 2 1/2
5/8 to 3/4	2 5/8	2 7/8	3 1/8	1 1/4	3	2	4	.230 × 5/8 × 2 1/2
3/4 to 7/8	2 11/16	2 7/8	3 1/8	1 1/4	3	3	4	.230 × 5/8 × 2 1/2
7/8 to 1	2 7/8	2 7/8	3 3/8	1 1/4	3	3	4	.230 × 5/8 × 2 1/2
1 to 1 1/8	2 15/16	2 7/8	3 3/8	1 1/2	3	3	4	.230 × 5/8 × 2 1/2
1 1/8 to 1 1/4	3 1/8	2 7/8	3 5/8	1 1/2	3	3	4	.230 × 5/8 × 2 1/2
1 1/4 to 1 3/8	3 3/16	2 7/8	3 5/8	1 1/2	3	3	4	.230 × 5/8 × 2 1/2
1 3/8 to 1 1/2	3 3/8	2 7/8	4 1/8	1 1/2	3	3	4	.230 × 5/8 × 2 1/2
1 1/2 to 1 5/8	3 7/16	2 7/8	4 1/8	1 1/2	3	4	4	.230 × 5/8 × 2 1/2
1 5/8 to 1 3/4	3 5/8	2 7/8	4 3/8	1 1/2	3	4	4	.230 × 5/8 × 2 1/2
1 3/4 to 1 7/8	3 11/16	2 7/8	4 3/8	1 1/2	3	4	4	.230 × 5/8 × 2 1/2
1 7/8 to 2	3 7/8	2 7/8	4 5/8	1 1/2	3	4	4	.230 × 5/8 × 2 1/2

Style "M-00, M-00-D, M-0, M-0-D, M-2 & M-2-D" Adjustable Hollow Mills

- Compact
- Positive Cutting Rake
- Four Blades

Style "L-00, L-00-D, L-0, L-0-D, L-2 & L-2-D" Adjustable Hollow Mills

- Compact
- Zero Cutting Rake
- Four Blades

L dimension varies from 3/8" to 1/2" depending upon diameter to be cut and size of blade.
L dimension varies from 1/4" to 3/8" on M-00 & M-00-D mills only depending upon diameter to be cut and size of blade.

Style					
Positive Cutting Rake			Zero Cutting Rake		
Tool Catalog Number		Blade Catalog Number	Tool Catalog Number		Blade Catalog Number
Std. Straight Shanks	Std. Taper Shanks	H.S.S. Blades	Std. Straight Shanks	Std. Taper Shanks	H.S.S. Blades
M-00	00-M-00	M11-4	L-00	00-L-00	L11-4
	18-M-00			18-L-00	
	14-M-00			14-L-00	
M-00-D	00-M-00-D		L-00-D	00-L-00-D	
	18-M-00-D			18-L-00-D	
	14-M-00-D			14-L-00-D	
M-0	18-M-0	BM17-4	L-0	18-L-0	AL17-4
M-0-D	14-M-0-D	MD23-4	L-0-D	14-L-0-D	LD23-4
	38-M-0-D			38-L-0-D	
	12-M-0-D			12-L-0-D	
	58-M-0-D			58-L-0-D	
M-2	18-M-2	BM17-4	L-2	18-L-2	AL17-4
M-2-D	14-M-2-D	MD23-4	L-2-D	14-L-2-D	LD23-4
	38-M-2-D			38-L-2-D	
	12-M-2-D			12-L-2-D	
	58-M-2-D			58-L-2-D	

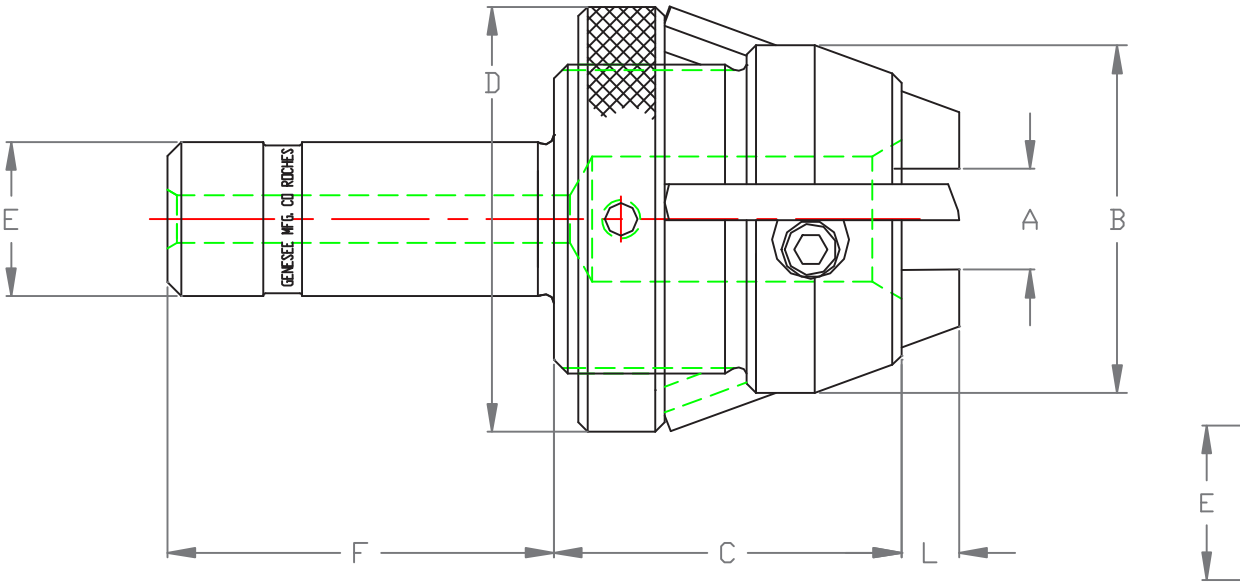

Specifications

A	B	C	D	E	F		
Capacity	Diameter Head	Length Body	Largest Outer Diameter	Diameter Shank	Length Shank	Number of Blades	Size of Blades
0 to 1/8	1 1/4	1 1/2	1 9/16	5/8	1 1/4	4	.110 × 11/32 × 1 1/4
1/8 to 1/4	1 5/16						
1/4 to 3/8	1 3/8						
0 to 1/8	1 1/4	1 1/2	1 9/16	3/4	2 1/4	4	.110 × 11/32 × 1 1/4
1/8 to 1/4	1 5/16						
1/4 to 3/8	1 3/8						
1/8 to 1/4	1 13/16	2 1/4	2 1/4	3/4	2	4	.170 × 1/2 × 2
1/4 to 3/8	1 15/16	2 1/4	2 3/8	3/4	2	4	.230 × 1/2 × 2
3/8 to 1/2	2 1/16		2 1/2				
1/2 to 5/8	2 1/8		2 3/4				
5/8 to 3/4	2 1/4		2 3/4				
1/8 to 1/4	1 13/16	2 1/4	2 1/4	1	2 1/2	4	.170 × 1/2 × 2
1/4 to 3/8	1 15/16	2 1/4	2 3/8	1	2 1/2	4	.230 × 1/2 × 2
3/8 to 1/2	2 1/16		2 1/2				
1/2 to 5/8	2 1/8		2 3/4				
5/8 to 3/4	2 1/4		2 3/4				

Style "X" Genesee Adjustable Hollow Mills

- Alignment Correcting
- Positive Cutting Rake
- Four Blades

(As seen in photo)

Style "R" Genesee Adjustable Hollow Mills

- Alignment Correcting
- Zero Cutting Rake
- Four Blades

Style					
Positive Cutting Rake			Zero Cutting Rake		
Tool Catalog Number		Blade Catalog Number	Tool Catalog Number		Blade Catalog Number
Style	Catalog Number	H.S.S. Blades	Style	Catalog Number	H.S.S. Blades
X-1	00-X-1	X11-4	R-1	00-R-1	R11-4
	18-X-1			18-R-1	
	14-X-1			14-R-1	
X-2	00-X-2		R-2	00-R-2	
	18-X-2			18-R-2	
	14-X-2			14-R-2	
X-3	18-X-3	X17-4	R-3	18-R-3	R17-4
	14-X-3	X23-4		14-R-3	R23-4
	38-X-3			38-R-3	
X-4	18-X-4	X17-4	R-4	18-R-4	R17-4
	14-X-4	X23-4		14-R-4	R23-4
	38-X-4			38-R-4	
	12-X-4			12-R-4	
	58-X-4			58-R-4	

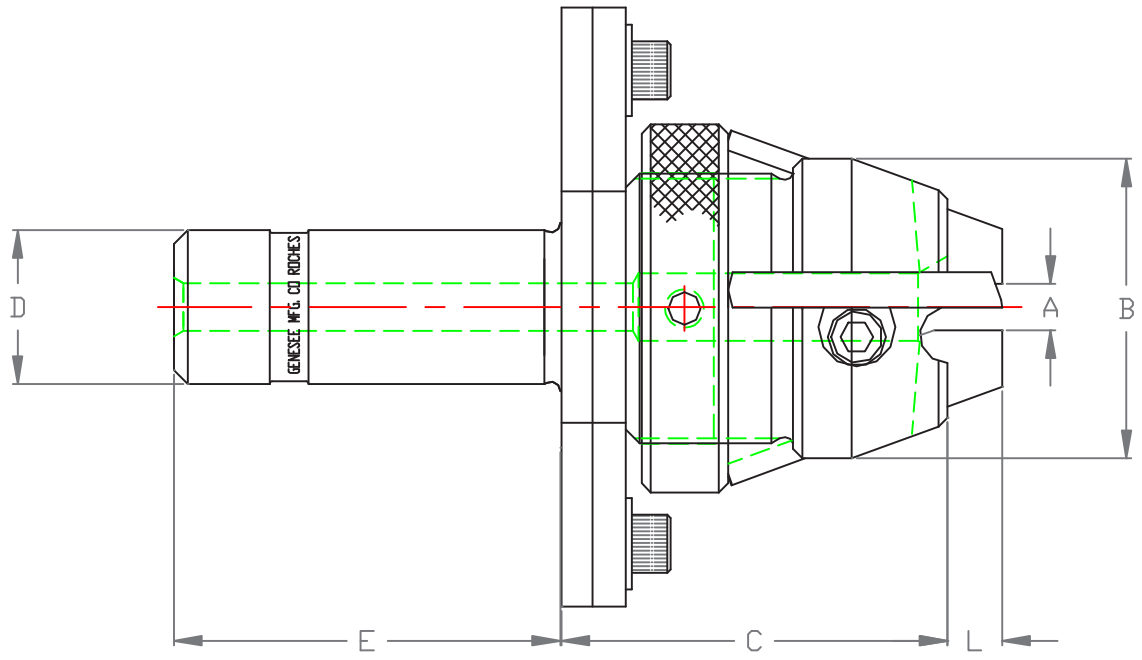

Specifications

A	B	C	D	E	F	G			L
Capacity	Diameter Head	Length Body	Diameter Shank	Length Shank	Width	Diameter Flange	Number of Blades	Size of Blades	
0 to 1/8	1 1/4	1 5/8	5/8	1 1/4	1 9/16	2 1/2	4	.11 × 11/32 × 1 1/16	5/32 to 5/16 Depending on Size Adjustment
1/8 to 1/4	1 5/16								
1/4 to 3/8	1 3/8								
0 to 1/8	1 1/4	1 5/8	3/4	2 1/4	1 9/16	2 1/2	4	.11 × 11/32 × 1 1/16	
1/8 to 1/4	1 5/16								
1/4 to 3/8	1 3/8								
1/8 to 1/4	1 13/16	2 1/2	3/4	2	2 1/8	3 7/8	4	.17 × 1/2 × 1 13/16	
1/4 to 3/8	1 15/16	2 1/2	3/4	2	2 1/8	3 7/8	4	.23× 1/2 × 1 13/16	9/32 to 7/16 Depending on Size Adjustment
3/8 to 1/2	2 1/16								
1/8 to 1/4	1 13/16	2 1/2	1	2 1/2	2 1/8	3 7/8	4	.17 × 1/2 × 1 13/16	
1/4 to 3/8	1 15/16	2 1/2	1	2 1/2	2 5/8	3 7/8	4	.23× 1/2 × 1 13/16	
3/8 to 1/2	2 1/16					3 7/8			
1/2 to 5/8	2 1/8					4 1/8			
5/8 to 3/4	2 1/4					4 1/8			

Style "E" Genesee Adjustable Hollow Mills

- Maximum Removal
- Positive Cutting Rake
- Four Blades

Style "G" Genesee Adjustable Hollow Mills

- Maximum Removal
- Zero Cutting Rake
- Four Blades

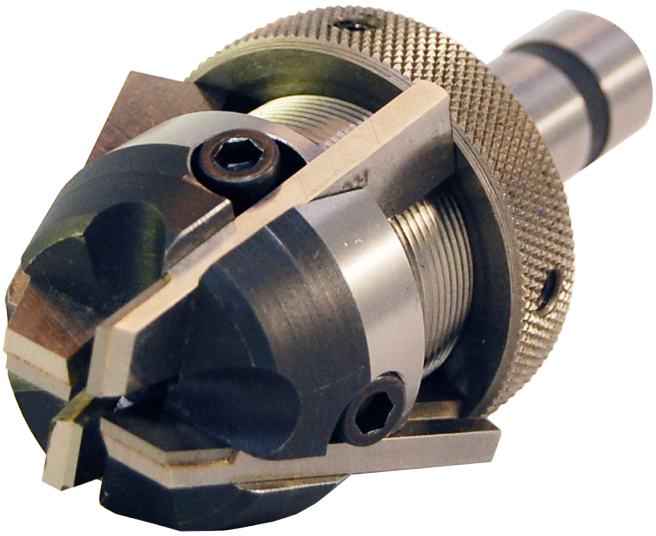

L dimension varies from 5/8" to 3/4" depending upon diameter to be cut and size of blade.

Style					
Positive Cutting Rake			Zero Cutting Rake		
Tool Catalog Number		Blade Catalog Number	Tool Catalog Number		Blade Catalog Number
Std. Straight Shanks	Std. Taper Shanks	H.S.S. Blades	Std. Straight Shanks	Std. Taper Shanks	H.S.S. Blades
18-ES	18-ET3	E23-3	18-GS	18-GT3	G23-3
14-ES	14-ET3	E28-3	14-GS	14-GT3	G28-3
38-ES	38-ET		38-GS	38-GT	
12-ES	12-ET	E35-3	12-GS	12-GT	G35-3
58-ES	58-ET		58-GS	58-GT	
34-ES	34-ET	E35-4	34-GS	34-GT	G35-4
78-ES	78-ET		78-GS	78-GT	
100-ES	100-ET	E47-4	100-GS	100-GT	G47-4
118-ES	118-ET		118-GS	118-GT	
114-ES	114-ET		114-GS	114-GT	
138-ES	138-ET		138-GS	138-GT	
112-ES	112-ET		112-GS	112-GT	
158-ES	158-ET		158-GS	158-GT	
134-ES	134-ET		134-GS	134-GT	
178-ES	178-ET		178-GS	178-GT	

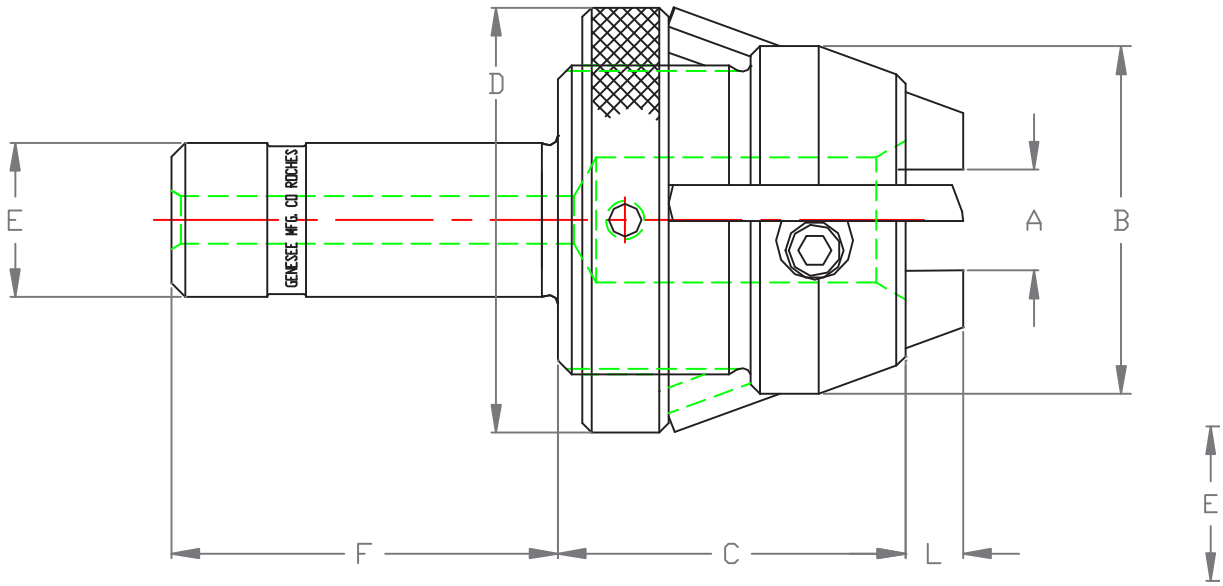

Specifications

A	B	C	D	E	F	G		
Capacity	Diameter Head	Length Body	Largest Outer Diameter	Diameter Shank	Length Shank	M.T. Shank Number	Number of Blades	Size of Blades
1/8 to 1/4	2 5/8	2 3/4	2 7/8	1	2 1/2	3	3	.230 × 5/8 × 2 1/2
1/4 to 3/8	2 5/8	3	3 1/8	1 1/4	3	3	3	.280 × 3/4 × 2 5/8
3/8 to 1/2	2 11/16	3	3 1/8	1 1/4	3	4	3	.280 × 3/4 × 2 5/8
1/2 to 5/8	3 1/8	3 3/16	3 5/8	1 1/2	3	4	3	.350 × 7/8 × 2 7/8
5/8 to 3/4	3 3/16	3 3/16	3 5/8	1 1/2	3	4	3	.350 × 7/8 × 2 7/8
3/4 to 7/8	3 3/8	3 3/16	4 1/8	2	3	4	4	.350 × 7/8 × 2 7/8
7/8 to 1	3 7/16	3 3/16	4 1/8	2	3	4	4	.350 × 7/8 × 2 7/8
1 to 1 1/8	3 15/16	3 1/2	4 5/8	2 1/2	4	5	4	.470 × 1 × 3 1/8
1 1/8 to 1 1/4	4 1/8	3 1/2	4 7/8	2 1/2	4	5	4	.470 × 1 × 3 1/8
1 1/4 to 1 3/8	4 3/16	3 1/2	4 7/8	2 1/2	4	5	4	.470 × 1 × 3 1/8
1 3/8 to 1 1/2	4 3/8	3 1/2	5 1/8	2 1/2	4	5	4	.470 × 1 × 3 1/8
1 1/2 to 1 5/8	4 7/16	3 1/2	5 1/8	3	4	5	4	.470 × 1 × 3 1/8
1 5/8 to 1 3/4	4 5/8	3 1/2	5 3/8	3	4	5	4	.470 × 1 × 3 1/8
1 3/4 to 1 7/8	4 11/16	3 1/2	5 3/8	3	4	5	4	.470 × 1 × 3 1/8
1 7/8 to 2	4 7/8	3 1/2	5 5/8	3	4	5	4	.470 × 1 × 3 1/8

Style "T" Genesee Adjustable Hollow Mills

- Finishing
- Positive Cutting Rake
- Four, Five, Six & Eight Blades

Style "V" Genesee Adjustable Hollow Mills

- Finishing
- Zero Cutting Rake
- Four, Five, Six & Eight Blades

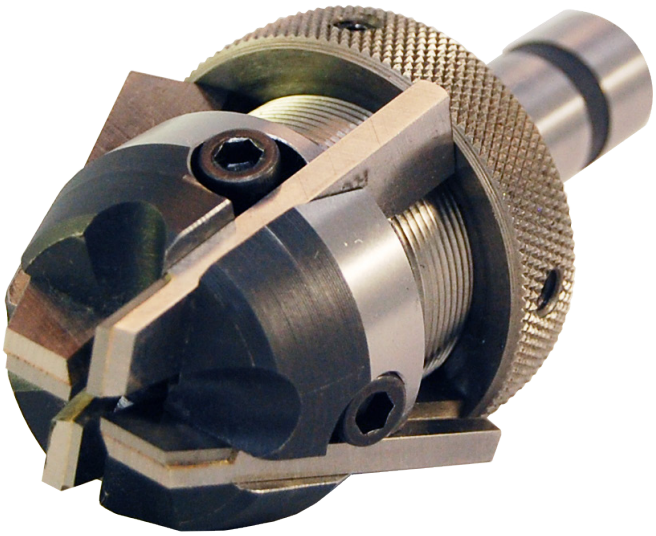

L dimension varies from 3/8" to 5/8" depending upon diameter to be cut and size of blade.

Style					
Positive Cutting Rake			Zero Cutting Rake		
Tool Catalog Number		Blade Catalog Number	Tool Catalog Number		Blade Catalog Number
Std. Straight Shanks	Std. Taper Shanks	H.S.S. Blades	Std. Straight Shanks	Std. Taper Shanks	H.S.S. Blades
18-TS	18-TT	T17-4	18-AS	18-VT	AL17-4
14-TS	14-TT	T17-5	14-AS	14-VT	V17-5
38-TS	38-TT		38-VS	38-VT	
12-TS	12-TT	T23-5	12-VS	12-VT	V23-5
58-TS	58-TT		58-VS	58-VT	
34-TS	34-TT		34-VS	34-VT	
78-TS	78-TT		78-VS	78-VT	
100-TS	100-TT	T23-6	100-VS	100-VT	V23-6
118-TS	118-TT		118-VS	118-VT	
114-TS	114-TT		114-VS	114-VT	
138-TS	138-TT		138-VS	138-VT	
112-TS	112-TT	T23-8	112-VS	112-VT	V23-8
158-TS	158-TT		158-VS	158-VT	
134-TS	134-TT		134-VS	134-VT	
178-TS	178-TT		178-VS	178-VT	

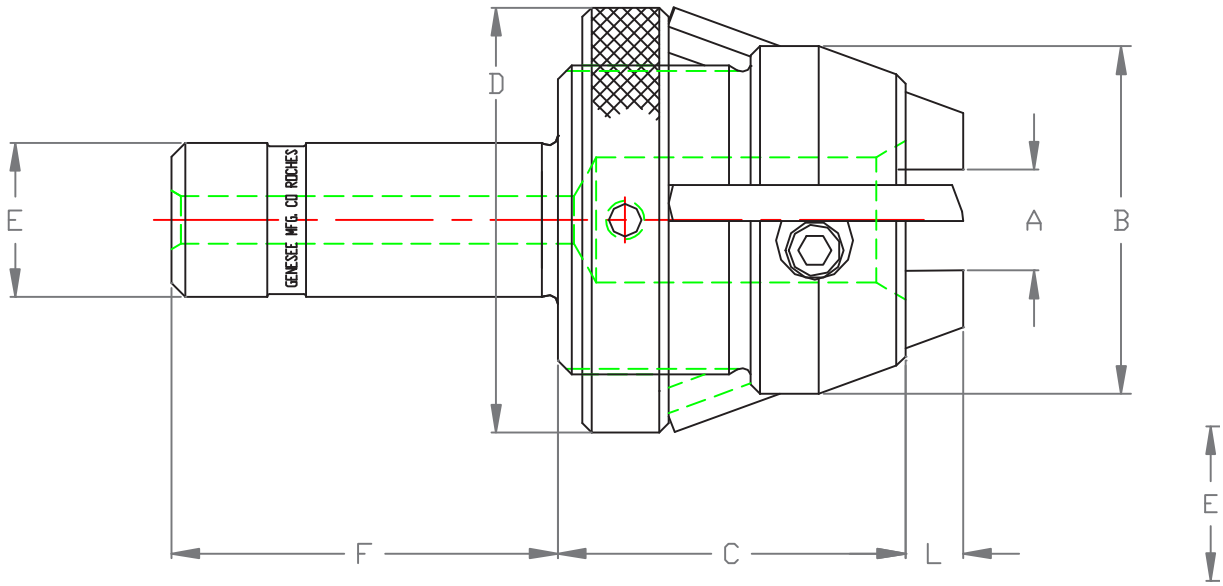

Specifications

A	B	C	D	E	F	G		
Capacity	Diameter Head	Length Body	Largest Outer Diameter	Diameter Shank	Length Shank	M.T. Shank Number	Number of Blades	Size of Blades
1/8 to 1/4	1 13/16	2 3/8	2	1	2 1/2	2	4	.170 × 1/2 × 2
1/4 to 3/8	1 1/16	2 3/8	2 3/8	1	2 1/2	2	4	.170 × 1/2 × 2
3/8 to 1/2	2 15/16	2 3/8	2 3/8	1	2 1/2	2	5	.170 × 1/2 × 2
1/2 to 5/8	2 7/16	2 7/8	2 7/8	1 1/4	3	3	5	.230 × 5/8 × 2 1/2
5/8 to 3/4	2 5/8	2 7/8	3 1/8	1 1/4	3	3	5	.230 × 5/8 × 2 1/2
3/4 to 7/8	2 11/16	2 7/8	3 1/8	1 1/2	3	3	5	.230 × 5/8 × 2 1/2
7/8 to 1	2 7/8	2 7/8	3 3/8	1 1/2	3	3	5	.230 × 5/8 × 2 1/2
1 to 1 1/8	2 15/16	2 7/8	3 3/8	2	3	4	6	.230 × 5/8 × 2 1/2
1 1/8 to 1 1/4	3 1/8	2 7/8	3 5/8	2	3	4	6	.230 × 5/8 × 2 1/2
1 1/4 to 1 3/8	3 3/16	2 7/8	3 5/8	2	3	4	6	.230 × 5/8 × 2 1/2
1 3/8 to 1 1/2	3 3/8	2 7/8	4 1/8	2	3	4	6	.230 × 5/8 × 2 1/2
1 1/2 to 1 5/8	3 7/16	2 7/8	4 1/8	2 1/2	3 1/2	4	8	.230 × 5/8 × 2 1/2
1 5/8 to 1 3/4	3 5/8	2 7/8	4 3/8	2 1/2	3 1/2	4	8	.230 × 5/8 × 2 1/2
1 3/4 to 1 7/8	3 11/16	2 7/8	4 3/8	2 1/2	3 1/2	4	8	.230 × 5/8 × 2 1/2
1 7/8 to 2	3 7/8	2 7/8	4 5/8	2 1/2	3 1/2	4	8	.230 × 5/8 × 2 1/2

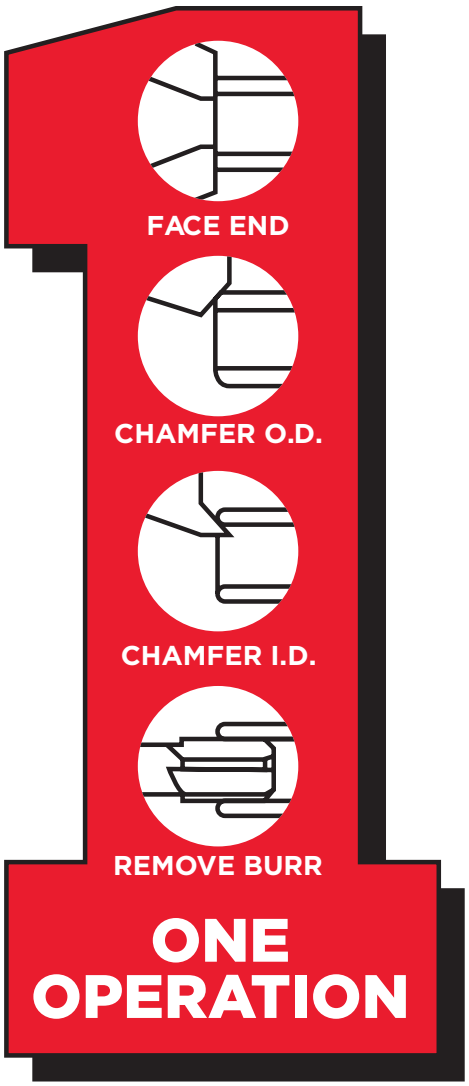

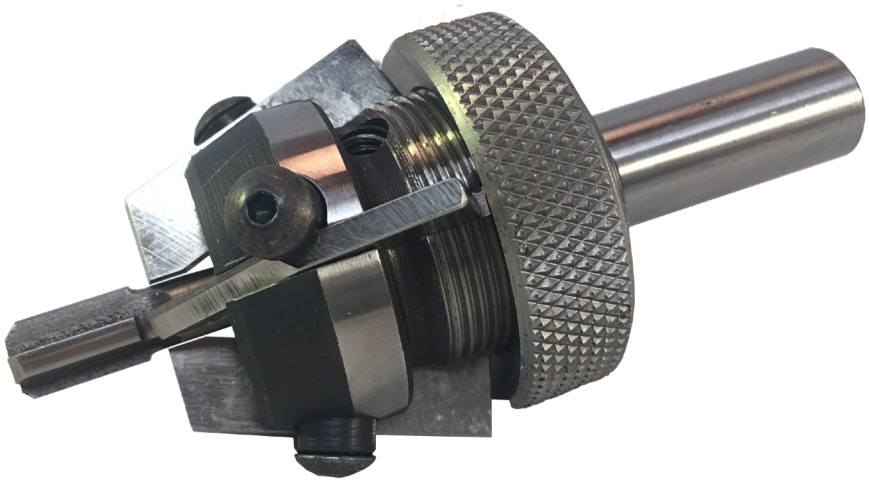

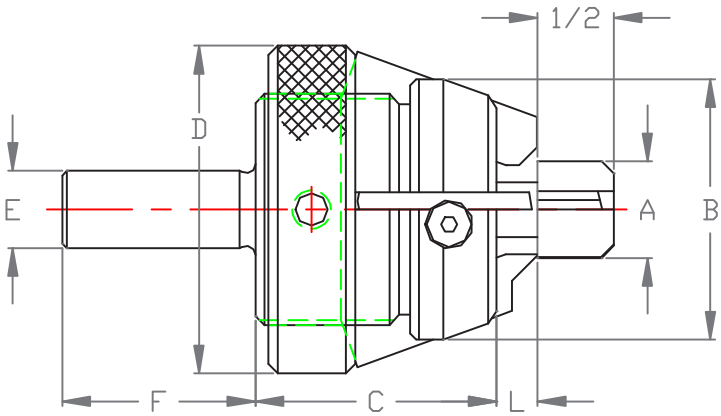

L dimension varies from 3/16" to 9/32" depending upon diameter to be cut and size of blade.

Specifications

Tool Catalog Number	Blade Catalog Number	Reamer Catergory Number			A	B	C	D	E	F
			Tube Outer Diameter	Wall Thickness	Reamer Size	Head Outer Diameter	Length Body	Outer Diameter	Shank	Length Shank
W1-20	W1	W-146	3/16	0.020	0.146	3/16	1 1/2	1 9/16	3/8	1 1/4
W1-28		W-130		0.028	0.130					
W2-28	W2	W-192	1/4	0.028	0.192	1 1/4	1 1/2	1 9/16	3/8	1 1/4
W232		W-184		0.032	0.184					
W2-35		W-178		0.035	0.178					
W2-42		W-164		0.042	0.164					
W2-49		W-150		0.049	0.150					
W2-60		W-128		0.060	0.128					
W3-20	W3	W-270	5/16	0.020	0.270	1 5/16	1 1/2	1 9/16	3/8	1 1/4
W3-28		W-255		0.028	0.255					
W3-32		W-247		0.032	0.247					
W3-35		W-241		0.035	0.241					
W3-42		W-227		0.042	0.227					
W2-49		W-213		0.049	0.213					
W3-60		W-191		0.060	0.191					

Specifications

Tool Catalog Number	Blade Catalog Number	Reamer Catergory Number			A	B	C	D	E	F
			Tube Outer Diameter	Wall Thickness	Reamer Size	Head Outer Diameter	Length Body	Outer Diameter	Shank	Length Shank
W4-20	W4	W4-20	3/8	0.020	0.333	1 5/16	1 1/2	1 9/16	1/2	1 1/4
W4-28		W4-28		0.028	0.317					
W4-32		W4-32		0.032	0.309					
W4-35		W4-35		0.035	0.303					
W4-42		W4-42		0.042	0.289					
W4-49		W4-49		0.049	0.275					
W4-60		W4-60		0.060	0.253					
W5-32	W5	W5-32	7/16	0.032	0.372	1 3/8	1 1/2	1 9/16	1/2	1 1/4
W5-35		W5-35		0.035	0.366					
W6-28	W6	W6-28	1/2	0.028	0.442	1 3/8	1 1/2	1 9/16	1/2	1 1/4
W6-32		W6-32		0.032	0.434					
W6-35		W6-35		0.035	0.428					
W6-40		W6-40		0.040	0.418					
W6-49		W6-49		0.049	0.400					
W6-65		W6-65		0.065	0.368					
W7-25	W7	W7-25	5/8	0.025	0.573	1 3/8	1 1/2	1 9/16	1/2	1 1/4
W7-32		W7-32		0.032	0.559					
W7-35		W7-35		0.035	0.553					
W7-40		W7-40		0.040	0.543					
W7-49		W7-49		0.049	0.525					
W7-65		W7-65		0.065	0.493					
W8-25	W8	W8-25	3/4	0.025	0.698	1 3/8	1 1/2	1 9/16	1/2	1 1/4
W8-32		W8-32		0.032	0.684					
W8-40		W8-40		0.040	0.668					
W8-49		W8-49		0.049	0.650					
W8-65		W8-65		0.065	0.618					
W9-25	W9	W9-25	7/8	0.025	0.823	1 11/16	1 9/16	2 1/16	1/2	1 1/4
W9-32		W9-32		0.032	0.809					
W9-40		W9-40		0.040	0.793					
W9-49		W9-49		0.049	0.775					
W9-65		W9-65		0.065	0.743					
W10-25	W10	W10-25	1	0.025	0.948	1 11/16	1 9/16	2 1/16	1/2	1 1/4
W10-32		W10-32		0.032	0.934					
W10-40		W10-40		0.040	0.918					
W10-49		W10-49		0.049	0.900					
W10-65		W10-65		0.065	0.868					
W11-25	W11	W11-25	1 1/8	0.025	1.073	1 15/16	1 9/16	2 5/16	5/8	1 1/4
W11-32		W11-32		0.032	1.059					
W11-40		W11-40		0.040	1.043					
W11-49		W11-49		0.049	1.025					
W11-65		W11-65		0.065	0.993					
W12-25	W12	W12-25	1 1/4	0.025	1.198	1 15/16	1 9/16	2 5/16	5/8	1 1/4
W12-32		W12-32		0.032	1.184					
W12-40		W12-40		0.040	1.168					
W12-49		W12-49		0.049	1.150					
W12-65		W12-65		0.065	1.118					

Style "H" Genesee Facing and Counterboring

- Heavy Cuts
- Three Blades

(As seen in photo)

Style "F" Genesee Facing and Counterboring

- Finishing
- Three, Four & Five Blades

Style					
Maximum Removal			Finishing		
Tool Catalog Number		Blade Catalog Number	Tool Catalog Number		Blade Catalog Number
Std. Straight Shanks	Std. Taper Shanks	H.S.S. Blades	Std. Straight Shanks	Std. Taper Shanks	H.S.S. Blades
114-HS	114-HT	114-H	114-HS	114-HT	114-H
138-HS	138-HT	138-H	138-HS	138-HT	138-H
112-HS	112-HT	112-H	112-FS	112-FT	112-H
158-HS	158-HT	158-H	158-FS	158-FT	158-H
134-HS	134-HT	134-H	134-FS	134-FT	134-H
178-HS	178-HT	178-H	178-FS	178-FT	178-H
200-HS	200-HT	200-H	200-FS	200-FT	200-H
218-HS	218-HT	218-H	218-FS	218-FT	218-H
214-HS	214-HT	214-H	214-FS	214-FT	214-H
238-HS	238-HT	238-H	238-FS	238-FT	238-H
212-HS	212-HT	212-H	212-FS	212-FT	212-H
258-HS	258-HT	258-H	258-FS	258-FT	258-H
234-HS	234-HT	234-H	234-FS	234-FT	234-H
278-HS	278-HT	278-H	278-FS	278-FT	278-H
300-HS	300-HT	300-H	300-FS	300-FT	300-H
314-HS	314-HT	314-H	314-FS	314-FT	314-H
312-HS	312-HT	312-H	312-FS	312-FT	312-H
334-HS	334-HT	334-H	334-FS	334-FT	334-H
400-HS	400-HT	400-H	400-FS	400-FT	400-H

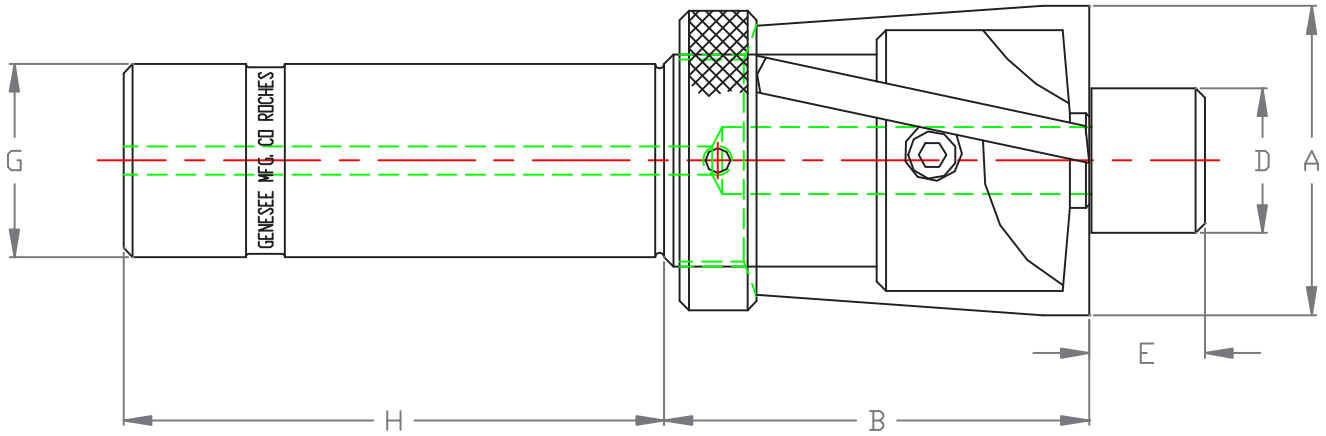

Specifications

A	B	C	D	E	F	G	H			
Diameter	Length of Head	Morse Taper Shank Number	Range of Pilot Sizes	Length of Pilot	Pilot Hole Diameter	Diameter of Shank	Pilot Hole diameter	Number of Baldes Per Set	Number of Baldes Per Set	Size of Blades
1 1/4	2 3/8	2	3/8 to 3/4	1/2	1/4	3/4	2 1/2	3	3	.170 × 15/32 × 2
1 3/8	2 3/8	2	3/8 to 3/4	1/2	1/4	3/4	2 1/2	3	3	.170 × 17/32 × 2
1 1/2	2 3/8	2	9/16 to 1	5/8	3/8	1	3	3	4	.170 × 1/2 × 2
1 5/8	2 3/4	3	9/16 to 1	5/8	3/8	1	3	3	4	.230 × 9/16 × 2 3/8
1 3/4	2 3/4	3	9/16 to 1	5/8	3/8	1	3	3	4	.230 × 5/8 × 2 3/8
1 7/8	2 3/4	3	5/8 to 1 1/4	3/4	7/16	1	3	3	4	.230 × 21/32× 2 3/8
2	2 3/4	3	5/8 to 1 1/4	3/4	7/16	1 1/4	3 1/2	3	4	.230 × 23/32 × 2 3/8
2 1/8	3	3	3/4 to 1 3/4	1	9/16	1 1/4	3 1/2	3	5	.230 × 23/32 × 2 3/8
2 1/4	3	4	3/4 to 1 3/4	1	9/16	1 1/4	3 1/2	3	5	.230 × 25/32 × 2 3/8
2 3/8	3	4	3/4 to 1 3/4	1	9/16	1 1/4	3 1/2	3	5	.280 × 27/32 × 2 5/8
2 1/2	3	4	3/4 to 1 3/4	1	9/16	1 1/2	4	3	5	.280 × 29/32 × 2 5/8
2 5/8	3	4	7/8 to 1 3/4	1	5/8	1 1/2	4	3	5	.280 × 29/32 × 2 5/8
2 3/4	3	4	7/8 to 1 3/4	1	5/8	1 1/2	4	3	5	.280 × 31/32 × 2 5/8
2 7/8	3	4	1 to 2	1 1/4	3/4	1 1/2	4	3	5	.280 × 31/32 × 2 5/8
3	3 1/4	4	1 to 2	1 1/4	3/4	1 3/4	4	3	5	.280 × 1 1/32 × 2 5/8
3 1/4	3 1/4	4	1 1/4 to 2 1/2	1 1/4	1	1 3/4	4	3	5	.350 × 1 1/32 × 2 3/4
3 1/2	3 1/4	4	1 1/4 to 2 1/2	1 1/4	1	1 3/4	4	3	5	.350 × 1 5/32 × 2 3/4
3 3/4	3 1/2	4	1 1/2 to 2 1/2	1 1/4	1	1 3/4	4	3	5	.350 × 1 5/32 × 2 3/4
4	3 1/2	5	1 1/2 to 2 1/2	1 1/4	1	1 3/4	4	3	5	.350 × 1 9/32 × 2 3/4

HOLLOW MILLING

Significantly outperforms single point tooling and offers many advantages over interpolation.

Double the feed rate, hold closer concentricity, allow multiple operations with diameter reduction.

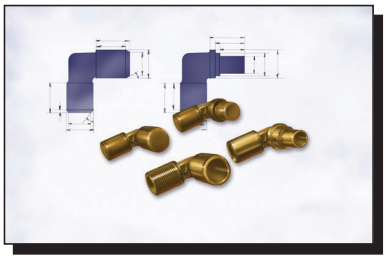

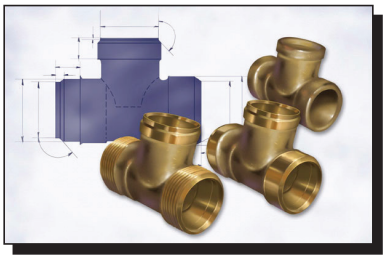

STEPS & DIAMETERS

Increased productivity, decreased tool costs and faster feed rates are just some of the advantages of producing parts with steps and multiple diameters using Genesee hollow mills.

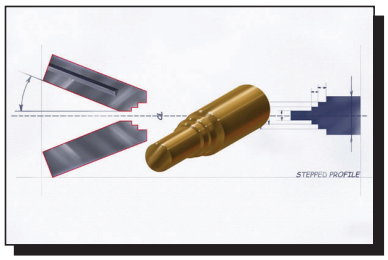

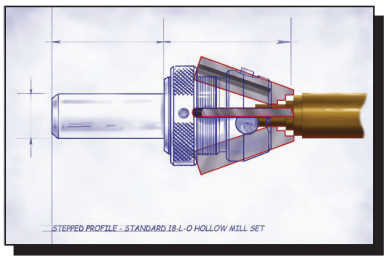

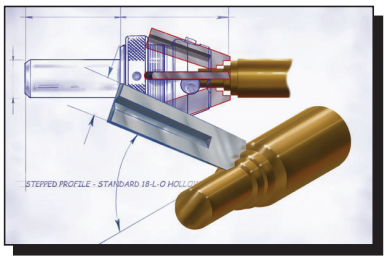

POINTS AND TAPERS

When high production is required or desired this is a clear cut area where hollow milling significantly outperforms other turning methods.

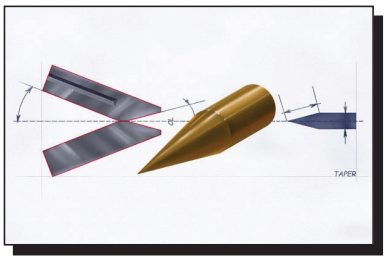

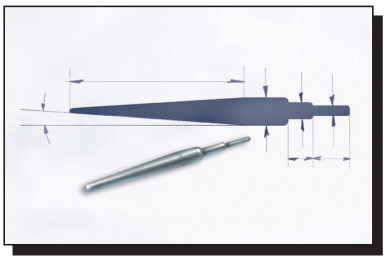

HOLLOW MILLING

Usable on any machine tool.

Produce geometries from the conventional to the complex in one operation.

TREPANNING

Genesee manufactures trepanning tools using special blades in a hollow mill body for trepanning diameters, forms and ring grooves in metals and other materials.

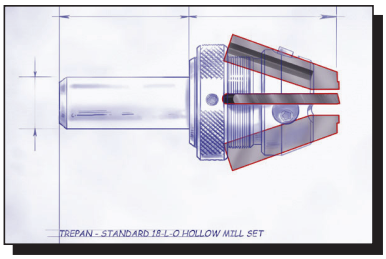

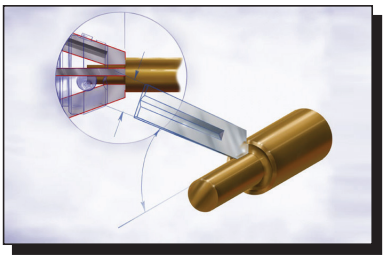

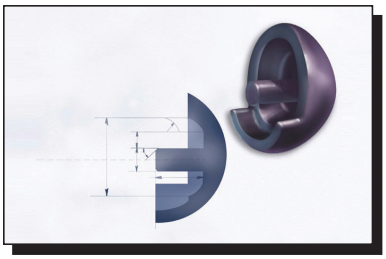

SPHERICAL RADIUS

To produce both convex and concave radii.

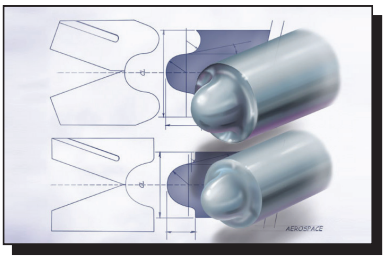

FACING & CENTERING

Genesee manufactures facing and centering tools using blades in a hollow mill body.

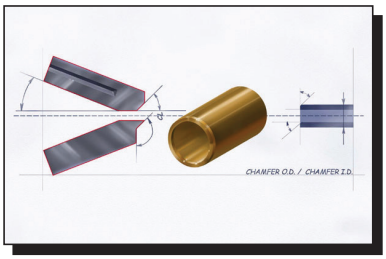

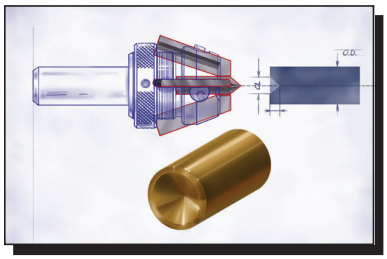

NOTES

INDI-SQUARE

SQUARENESS & VERTICAL STRAIGHTNESS INSTRUMENT
with the exclusive proven anti-friction lifetime sliding mechanism

High precision INDI-SQUARE is the fast & proven method for inspection of squareness.

Rapidly indicates squareness and straightness to .0001.

Simply position the INDI-SQUARE to work, raise and lower the anti-friction head and read the indicator. This will immediately show any error in squareness or straightness.

The INDI-SQUARE can be used in any position around the work. The master bar is adjustable in both directions.

Can be used on a surface plate, machine table or the part itself.

Will indicate squareness and straightness in cavities, slots, recesses and other hard to reach places.

8″ and 18″

INDI-SQUARE is manufactured with the same quality, care, and experience earned by Genesee Manufacturing Company.

For complete information, please visit us a www.indi-square.com

INDI-SQUARE

ESTABLISHED 1908

Genesee Manufacturing Company, 566 Hollenbeck Street, Rochester, NY 14621
585.266.3201, Fax: 585.266.4499
www.geneseemfg.com, info@geneseemfg.com